ELECTRIC PUMP
EL1204

DRAGFLOW ULTIMATE EFFICIENCY



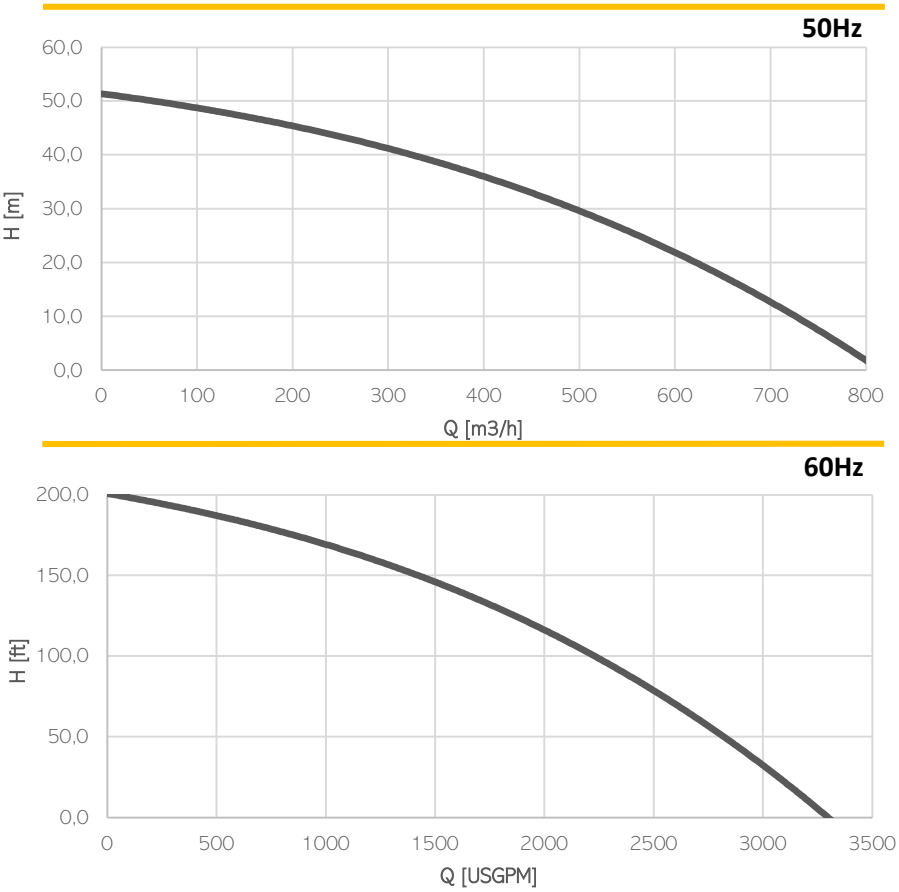

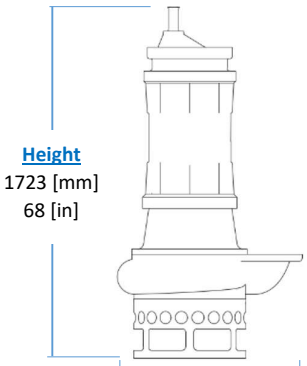

Height
1723 [mm]
68 [in]

Max diameter
945 [mm]
37.2 [in]

Weight
(without cable)
1250 [kg]
2755 [lb]

Model	EL1204	
Brake Power [kW|HP]	90 | 120	
Electric Power [kW|HP]	96 | 128	
Frequency [Hz]	50	60
Efficiency [%]	53%	54%
Number of Poles	4	4
RPM	1480	1776
Voltage [V]	400	460
Rated Current [A]	158	141
Solid handling [mm|in]	60 | 2.4	
Discharge [DN-PN]	150-10	

Materials

Part	Standard
Casing	Cast Iron EN-GJS800
Body	Cast Iron EN-GJL250
Wear Parts	High chrome EN-GJN-HV600 (CH6)
Minimum hardness [HB]	550
Main shaft	High tensile 39NiCrMo3
PH Range	5-10

Electrical motor

Insulation class H

Cable

1 x H07RN-F 4G50 length 20m

Operating Conditions

Max liquid temperature 35°C
Min Submersion depth 1510 mm

Seals and lubricants

Version	EL1204	MG	MS
Motor Side	LIPS	MECHANICAL	MECHANICAL
Impeller Side	LIPS	LIPS	MECHANICAL
Oil type	EP320	ISO32	ISO32