ELECTRIC PUMP
EL1204UHH

DRAGFLOW ULTIMATE EFFICIENCY



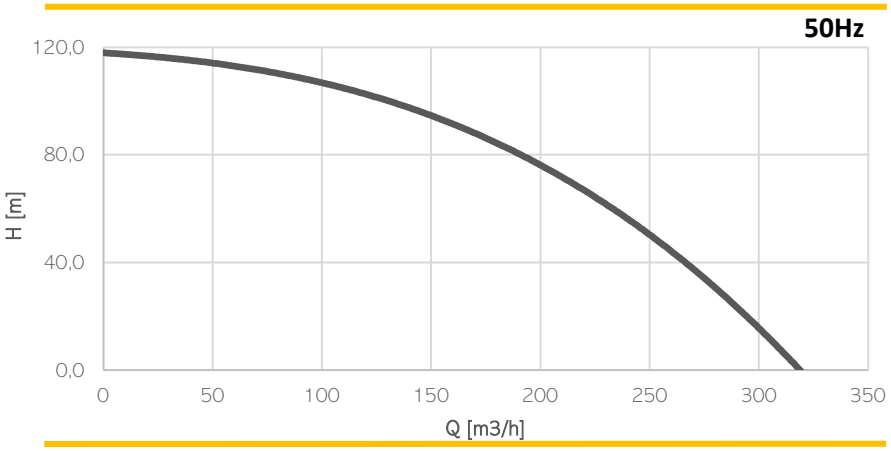

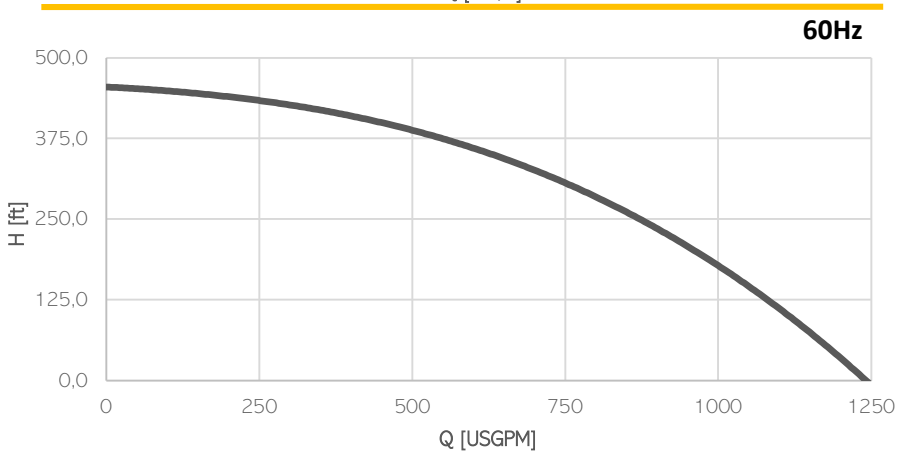

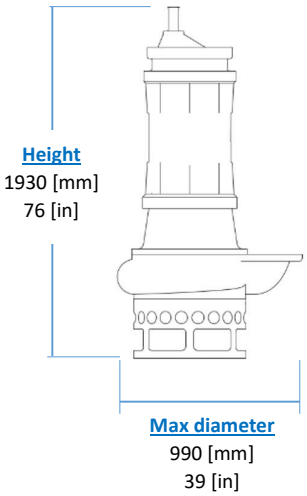

Height
1930 [mm]
76 [in]

Max diameter
990 [mm]
39 [in]

Weight
(without cable)
1850 [kg]
4080 [lb]

Model	EL1204UHH	
Brake Power [kW|HP]	120 | 160	
Electric Power [kW|HP]	128 | 171	
Frequency [Hz]	50	60
Efficiency [%]	43%	42%
Number of Poles	4	4
RPM	1450	1740
Voltage [V]	400	460
Rated Current [A]	206	180
Solid handling [mm|in]	20 | 0.8	
Discharge [DN-PN]	100-10	

Electrical motor

Insulation class H

Cable

2 x H07RN-F 4G35 length 20m

Operating Conditions

Max liquid temperature 35°C
Min Submersion depth 1700 mm

Materials

Part	Standard
Casing	Cast Iron EN-GJS800
Body	Cast Iron EN-GJL250
Wear Parts	High chrome EN-GJN-HV600 (CH6)
Minimum hardness [HB]	550
Main shaft	High tensile 39NiCrMo3
PH Range	5-10

Seals and lubricants

Version	-	MG	MS
Motor Side	-	MECHANICAL	MECHANICAL
Impeller Side	-	LIPS	MECHANICAL
Oil type	-	ISO32	ISO32