ELECTRIC PUMP

EL180

DRAGFLOW ULTIMATE EFFICIENCY



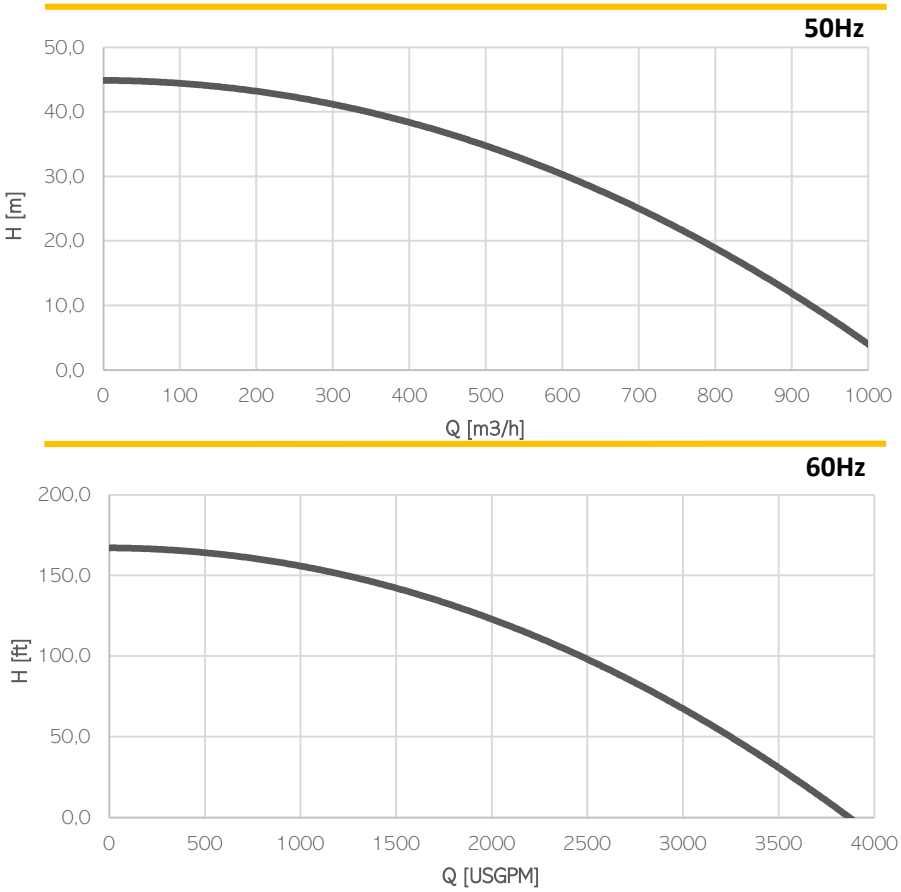

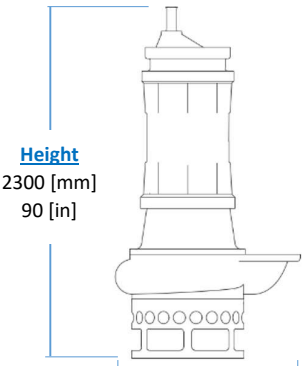

Height
2300 [mm]
90 [in]

Max diameter
1250 [mm]
50 [in]

KG
Weight
(without cable)
2750 [kg]
6060 [lb]

Model	EL180	
Brake Power [kW|HP]	130 | 180	
Electric Power [kW|HP]	138 | 160	
Frequency [Hz]	50	60
Efficiency [%]	56%	55%
Number of Poles	6	6
RPM	980	1176
Voltage [V]	400	460
Rated Current [A]	220	190
Solid handling [mm|in]	60 | 2.4	
Discharge [DN-PN]	200-10	

Materials

Part	Standard
Casing	Cast Iron EN-GJS500
Body	Cast Iron EN-GJL250
Wear Parts Minimum hardness [HB]	High chrome EN-GJN-HV600 (CH6) 550
Main shaft	High tensile 39NiCrMo3
PH Range	5-10

Seals and lubricants

Version	-	-	MS
Motor Side	-	-	MECHANICAL
Impeller Side	-	-	MECHANICAL
Oil type	-	-	ISO32

Electrical motor

Insulation class H

Cable

1 x H07RN-F 4G95 length 20m

Operating Conditions

Max liquid temperature 35°C
Min Submersion depth 1820 mm