ELECTRIC PUMP
EL25

DRAGFLOW ULTIMATE EFFICIENCY



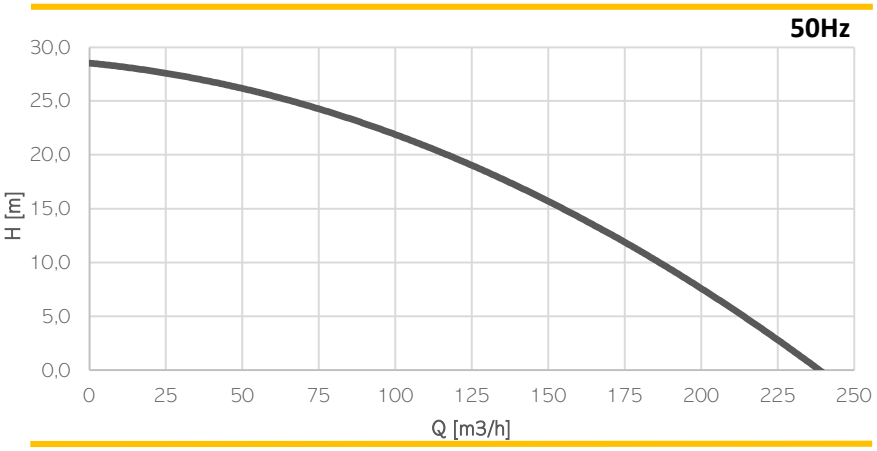

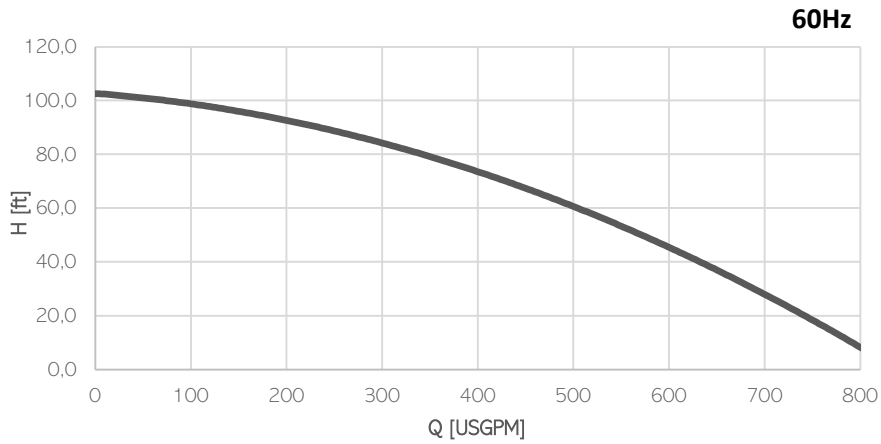

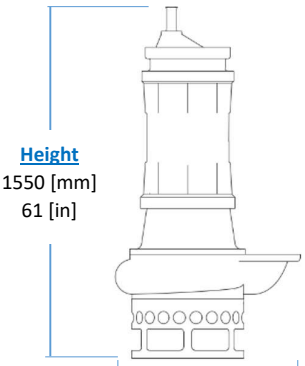

Height
1550 [mm]
61 [in]

Weight
(without cable)
715 [kg]
1580 [lb]

Max diameter
780 [mm]
31 [in]

Model	EL25	
Brake Power [kW|HP]	18.5 | 25	
Electric Power [kW|HP]	20.2 | 27	
Frequency [Hz]	50	60
Efficiency [%]	47%	47%
Number of Poles	6	6
RPM	970	1164
Voltage [V]	400	460
Rated Current [A]	37.2	32.5
Solid handling [mm|in]	35 | 1.4	
Discharge [DN-PN]	100-10	

Electrical motor

Insulation class H

Cable

1 x H07RN-F 4G16 length 20m

Operating Conditions

Max liquid temperature 35°C
Min Submersion depth 1240 mm

Materials

Part	Standard
Casing	Cast Iron EN-GJS500
Body	Cast Iron EN-GJL250
Wear Parts	High chrome EN-GJN-HV600 (CH6)
Minimum hardness [HB]	550
Main shaft	High tensile 39NiCrMo3
PH Range	5-10

Seals and lubricants

Version	EL25	MG	MS
Motor Side	LIPS	MECHANICAL	MECHANICAL
Impeller Side	LIPS	LIPS	MECHANICAL
Oil type	EP320	ISO32	ISO32