ELECTRIC PUMP
EL354

DRAGFLOW ULTIMATE EFFICIENCY



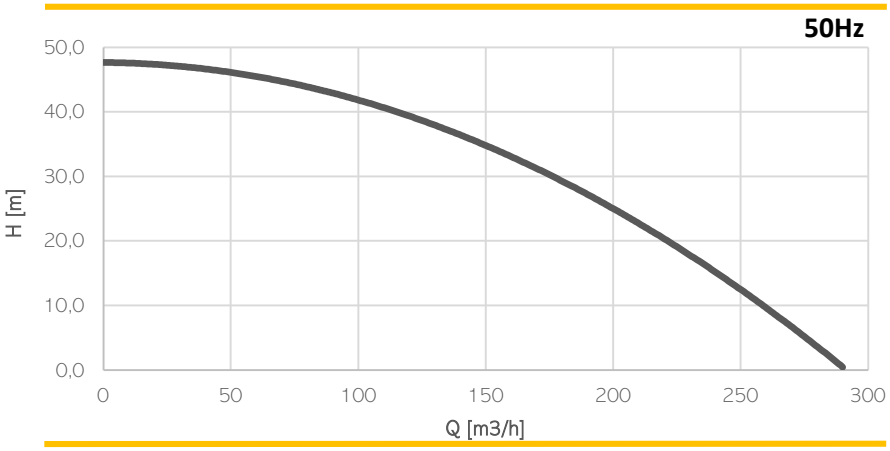

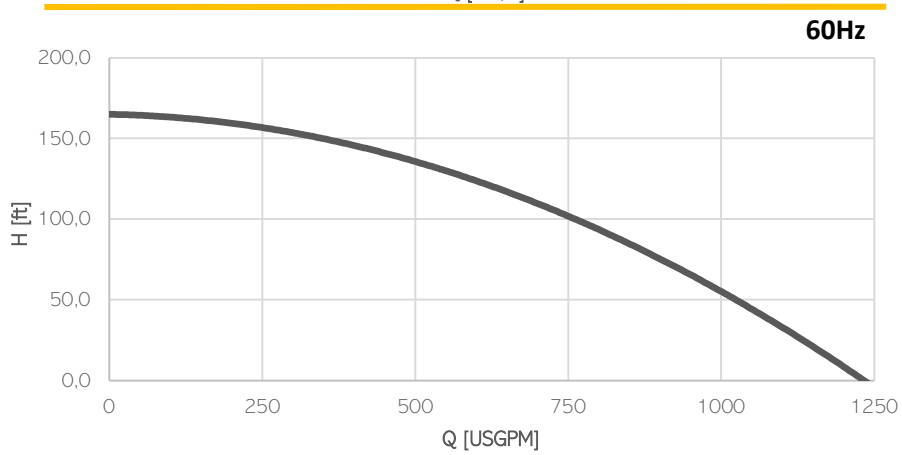

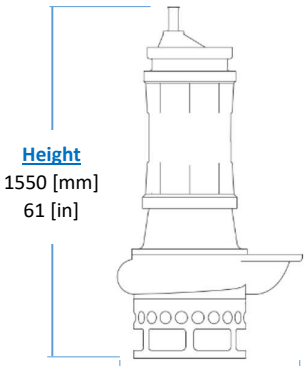

Height
1550 [mm]
61 [in]

Max diameter
905 [mm]
36 [in]

Weight
(without cable)
780 [kg]
1580 [lb]

Model	EL354	
Brake Power [kW|HP]	37 | 49	
Electric Power [kW|HP]	40 | 53	
Frequency [Hz]	50	60
Efficiency [%]	48%	44%
Number of Poles	4	4
RPM	1465	1758
Voltage [V]	400	460
Rated Current [A]	70	60
Solid handling [mm|in]	35 | 1.4	
Discharge [DN-PN]	100-10	

Materials

Part	Standard
Casing	Cast Iron EN-GJS800
Body	Cast Iron EN-GJL250
Wear Parts	High chrome EN-GJN-HV600 (CH6)
Minimum hardness [HB]	550
Main shaft	High tensile 39NiCrMo3
PH Range	5-10

Electrical motor

Insulation class H

Cable

1 x H07RN-F 4G16 length 20m

Operating Conditions

Max liquid temperature 35°C
Min Submersion depth 1240 mm

Seals and lubricants

Version	EL354	MG	MS
Motor Side	LIPS	MECHANICAL	MECHANICAL
Impeller Side	LIPS	LIPS	MECHANICAL
Oil type	EP320	ISO32	ISO32