ELECTRIC PUMP
EL60

DRAGFLOW ULTIMATE EFFICIENCY



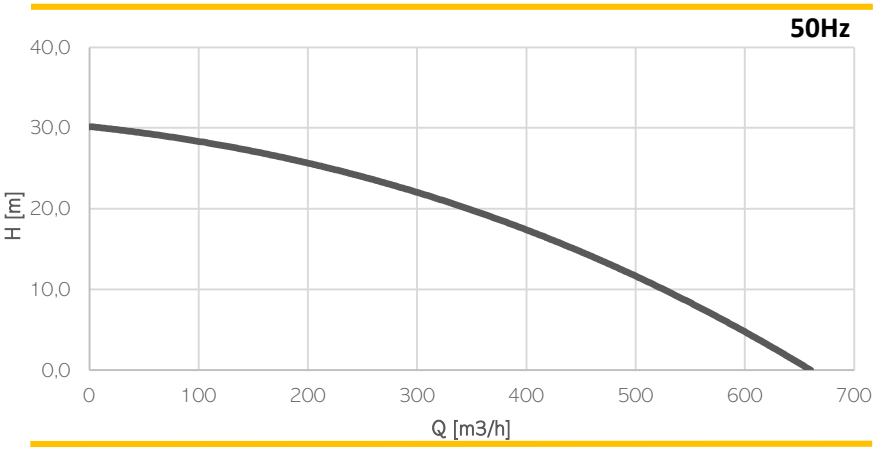

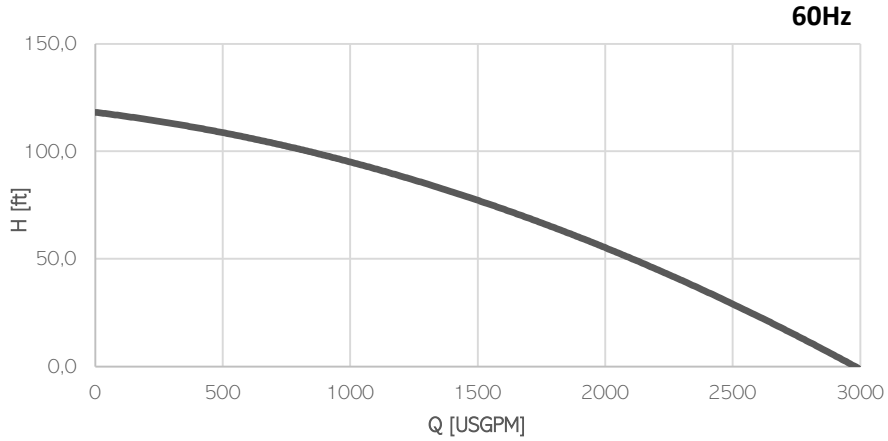

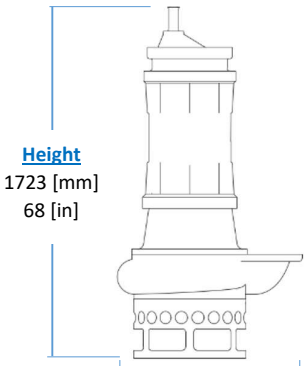

Height
1723 [mm]
68 [in]

Max diameter
945 [mm]
37.2 [in]

Weight
(without cable)
1060 [kg]
2337 [lb]

Model	EL60	
Brake Power [kW|HP]	45 | 60	
Electric Power [kW|HP]	49 | 66	
Frequency [Hz]	50	60
Efficiency [%]	52%	60%
Number of Poles	6	6
RPM	980	1176
Voltage [V]	400	460
Rated Current [A]	88	79
Solid handling [mm|in]	60 | 2.4	
Discharge [DN-PN]	150-10	

Electrical motor

Insulation class H

Cable

1 x H07RN-F 4G35 length 20m

Operating Conditions

Max liquid temperature 35°C
Min Submersion depth 1510 mm

Materials

Part	Standard
Casing	Cast Iron EN-GJS500
Body	Cast Iron EN-GJL250
Wear Parts Minimum hardness [HB]	High chrome EN-GJN-HV600 (CH6) 550
Main shaft	High tensile 39NiCrMo3
PH Range	5-10

Seals and lubricants

Version	EL60	MG	MS
Motor Side	LIPS	MECHANICAL	MECHANICAL
Impeller Side	LIPS	LIPS	MECHANICAL
Oil type	EP320	ISO32	ISO32