ELECTRIC PUMP
EL604

DRAGFLOW
ULTIMATE EFFICIENCY



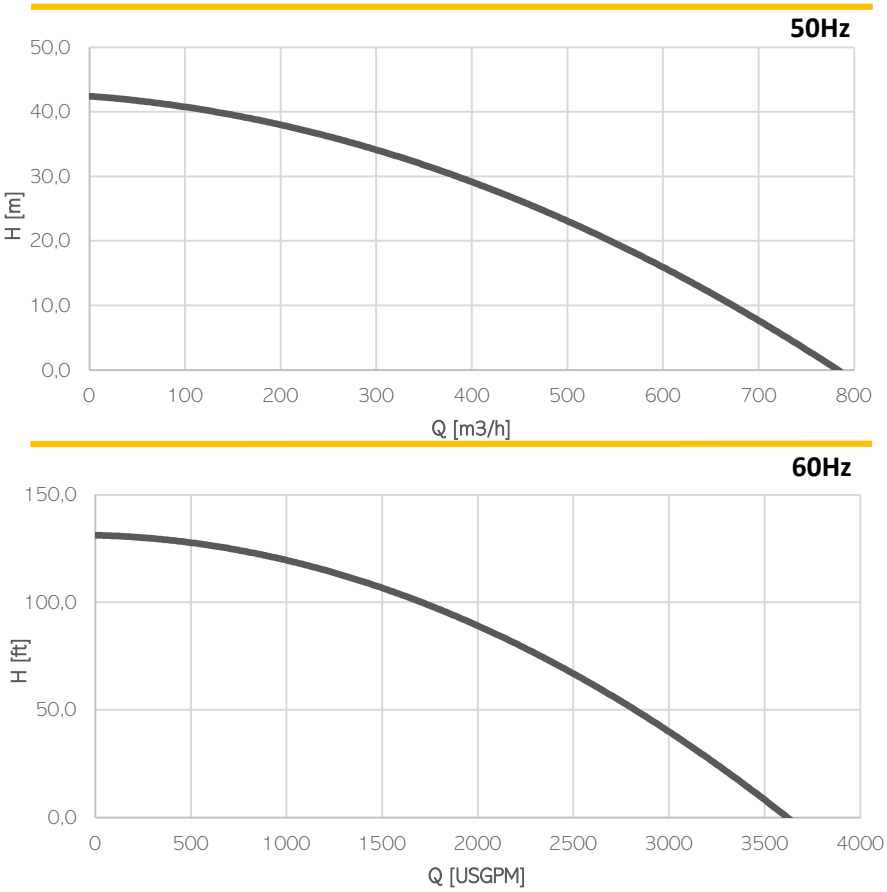

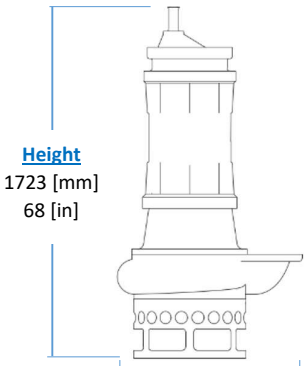

Height
1723 [mm]
68 [in]

Max diameter
945 [mm]
37.2 [in]

Weight
(without cable)
1100 [kg]
2425 [lb]

Model	EL604	
Brake Power [kW|HP]	75 | 100	
Electric Power [kW|HP]	80 | 107	
Frequency [Hz]	50	60
Efficiency [%]	54%	45%
Number of Poles	4	4
RPM	1480	1776
Voltage [V]	400	460
Rated Current [A]	131	115
Solid handling [mm|in]	60 | 2.4	
Discharge [DN-PN]	150-10	

Electrical motor

Insulation class H

Cable

1 x H07RN-F 4G35 length 20m

Operating Conditions

Max liquid temperature 35°C
Min Submersion depth 1510 mm

Materials

Part	Standard
Casing	Cast Iron EN-GJS800
Body	Cast Iron EN-GJL250
Wear Parts Minimum hardness [HB]	High chrome EN-GJN-HV600 (CH6) 550
Main shaft	High tensile 39NiCrMo3
PH Range	5-10

Seals and lubricants

Version	EL604	MG	MS
Motor Side	LIPS	MECHANICAL	MECHANICAL
Impeller Side	LIPS	LIPS	MECHANICAL
Oil type	EP320	ISO32	ISO32