HYDRAULIC PUMP
HY50



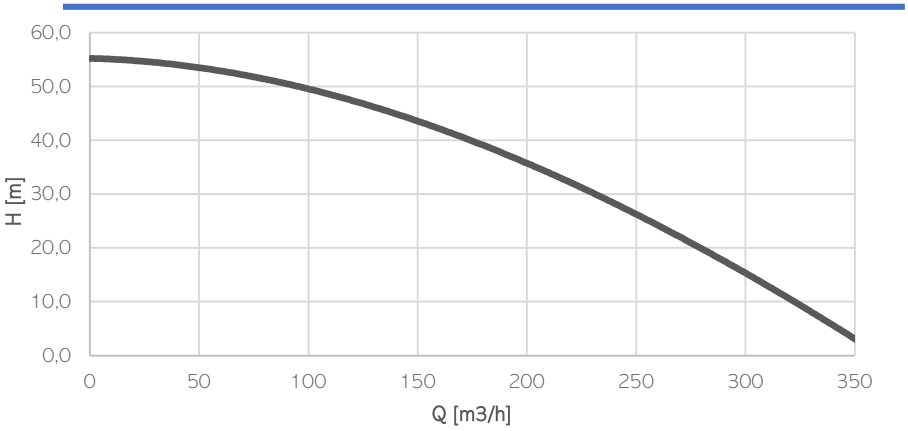

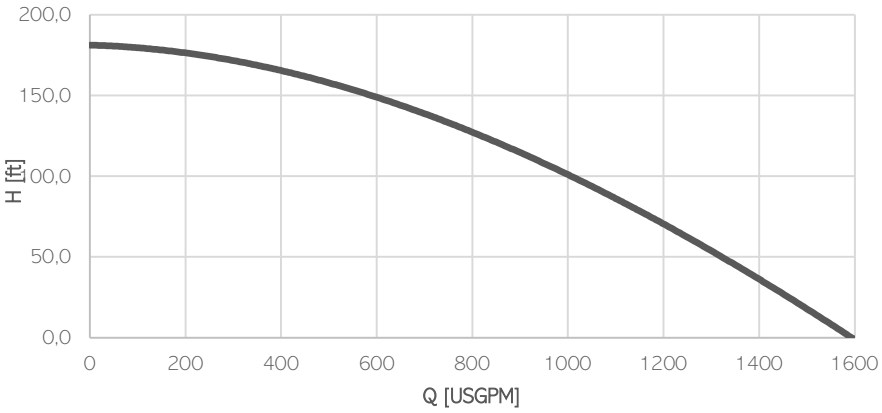

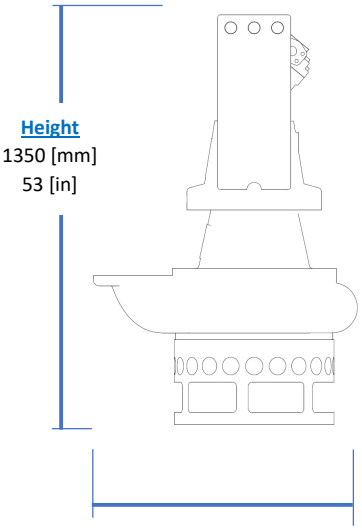

Height
1350 [mm]
53 [in]

Max diameter
910 [mm]
35.8 [in]

Weight
610 [kg]
1340 [lb]

Model	HY50
Brake Power [kW|HP]	50 | 67
Efficiency [%]	53
RPM Max	1180
Motor Displacement [cc]	80
Oil flow rate max [l/min]	100
Nominal pressure [bar]	300
Max pressure [bar]	350
Solid handling [mm|in]	35 | 1.4
Discharge [DN|PN]	100 | PN10

Materials

Part	Standard
Casing	Cast Iron EN-GJS500
Body	Cast Iron EN-GJL250
Wear Parts	High chrome EN-GJN-HV600 (CH6)
Minimum hardness [HB]	550
Main shaft	High tensile 39NiCrMo3
PH Range	5-10

Ports

- Service line Ports: SAE J518 1in
- Case drain Port: DIN3852 M18x1,5

Seals and lubricants

Version	HY50	MG	MS
Motor Side	LIPS	MECHANICAL	MECHANICAL
Impeller Side	LIPS	LIPS	MECHANICAL
Oil type	EP320	ISO32	ISO32

Operating Conditions

- Max liquid temperature 40°C
- Min Submersion depth 440mm