HYDRAULIC PUMP
HY600



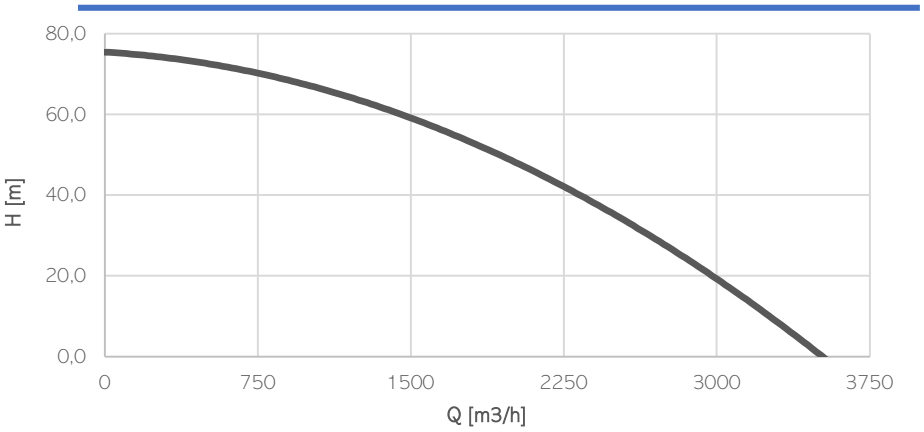

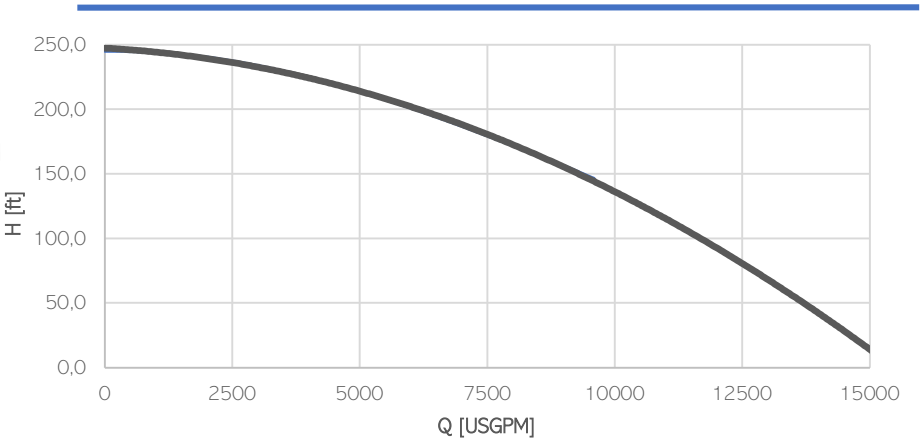

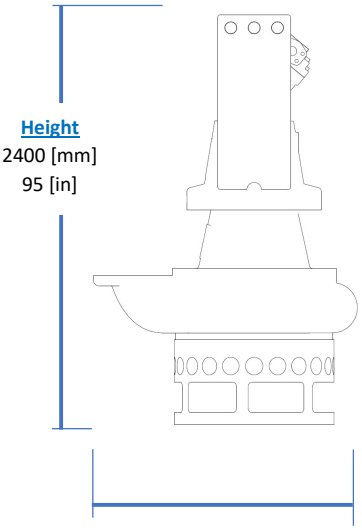

Height
2400 [mm]
95 [in]

Weight
3800 [kg]
8400 [lb]

Max diameter
1600 [mm]
63 [in]

Model	HY600
Brake Power [kW|HP]	475 | 630
Efficiency [%]	50
RPM Max	950
Motor Displacement [cc]	1000
Oil flow rate max [l/min]	950
Nominal pressure [bar]	300
Max pressure [bar]	350
Solid handling [mm|in]	120 | 4,7
Discharge [DN|PN]	300 | PN10

Materials

Part	Standard
Casing	Cast Iron EN-GJS500
Body	Cast Iron EN-GJS500
Wear Parts	High chrome EN-GJN-HV600 (CH6)
Minimum hardness [HB]	550
Main shaft	High tensile 39NiCrMo3
PH Range	5-10

Ports

- Service line Ports: SAE J518 1 1/4in
- Case drain Port: DIN3852 M33x2

Operating Conditions

- Max liquid temperature 40°C
- Min Submersion depth 1400mm

Seals and lubricants

Version	HY600	MG
Motor Side	LIPS	MECHANICAL
Impeller Side	LIPS	LIPS
Oil type	EP320	ISO32