HYDRAULIC PUMP
HY85/160

DRAGFLOW
ULTIMATE EFFICIENCY



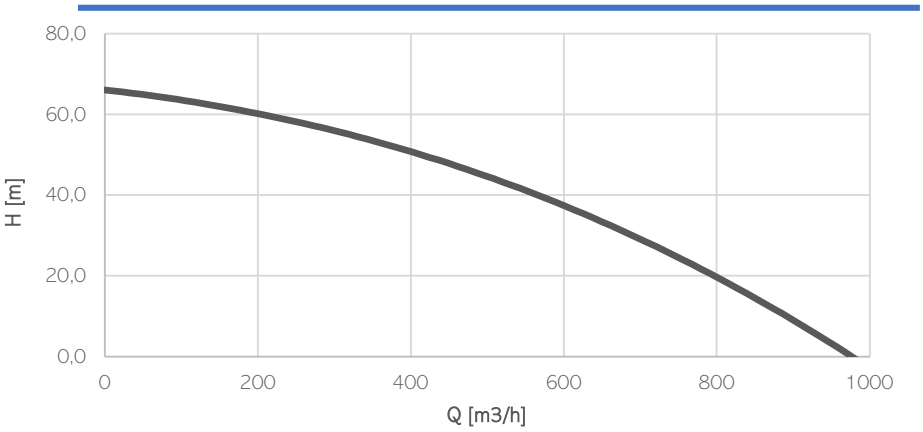

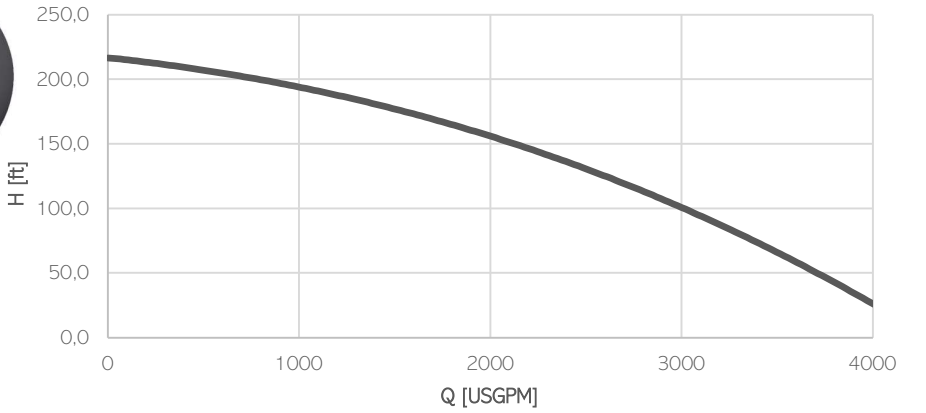

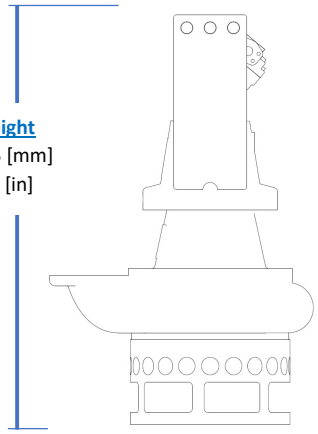

Height
1405 [mm]
55 [in]

Max diameter
945 [mm]
37.2 [in]

Weight
820 [kg]
1810 [lb]

Model	HY85/160
Brake Power [kW|HP]	120 | 165
Efficiency [%]	51
RPM Max	1450
Motor Displacement [cc]	160
Oil flow rate max [l/min]	240
Nominal pressure [bar]	300
Max pressure [bar]	350
Solid handling [mm|in]	60 | 2.4
Discharge [DN|PN]	200 | PN10

Materials

Part	Standard
Casing	Cast Iron EN-GJS500
Body	Cast Iron EN-GJL250
Wear Parts	High chrome EN-GJN-HV600 (CH6)
Minimum hardness [HB]	550
Main shaft	High tensile 39NiCrMo3
PH Range	5-10

Ports

- Service line Ports: SAE J518 1 1/4in
- Case drain Port: DIN3852 M22x1,5

Operating Conditions

- Max liquid temperature 40°C
- Min Submersion depth 440mm

Seals and lubricants

Version	HY85/160	MG	MS
Motor Side	LIPS	MECHANICAL	MECHANICAL
Impeller Side	LIPS	LIPS	MECHANICAL
Oil type	EP320	ISO32	ISO32